Capacitive Sensor

1 Overview

You will create a capacitive sensor using a parallel plate capacitor, similar to touch screen devices.

Start a new notebook

Before you begin, start a new notebook for this lab and title it `Lab 8`: in the PHYS 1140 Notebook, tap the **Notebook** menu, then **New notebook…**. See Start a Notebook for Today's Lab.

2 Learning Goals

After completing this lab, you should be able to:

- Explain the operating principles of a capacitive sensor.
- Use the results of a linear fit to make predictions.

3 Predict: Setup and Expected Behavior

This week, you will use the lab app to measure the capacitance of a parallel plate capacitor. It works similarly to the capacitance meters used in last week's activity, but instead of just displaying the capacitance value, it shows you how that value is determined: it measures the characteristic time for the capacitor to discharge through a 1 MΩ resistor.

Make sure your capacitive sensor is set up to match Figure 1. The left diagram shows the initial condition (top), where the capacitor is assembled but the mass is not yet in place and the plates are a distance x_0 apart. When a mass is placed on the top plate (bottom), the springs compress and the plate separation decreases to x, which increases the capacitance C — and, as you will see, the decay time τ.

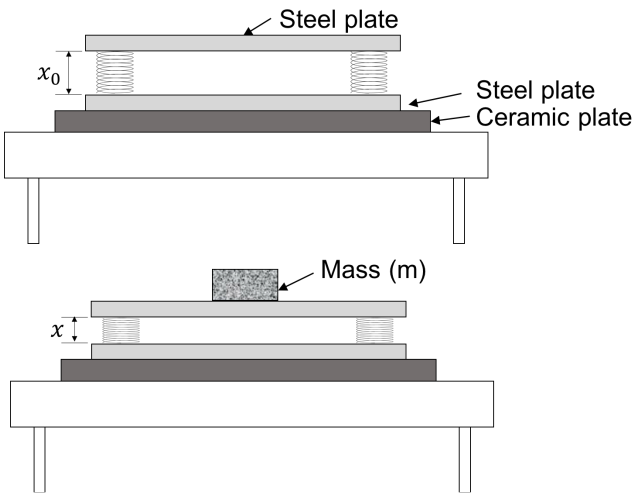

(a) Diagram

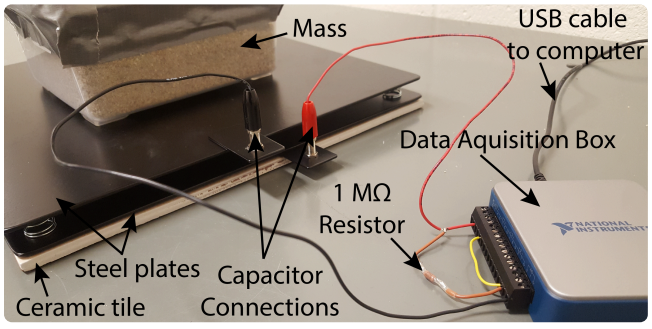

(b) Photo

Figure 1: Experimental setup. (Left) Before mass is in place, the distance between the plates is x_0. After the mass is in place the distance between the plates is x. (Right) Photo of setup.

Sketch a diagram of your setup in your lab notebook.

You can predict how τ should depend on the mass. The system is in equilibrium, so $F_{\text{net}} = 0$: the weight of the mass equals the force of the springs,

$$mg = k(x_0 - x),$$

where k is the effective spring constant of all four springs together. The capacitance is related to the plate separation by

$$C = \frac{\epsilon A}{x}.$$

Combining these two relationships gives our key relationship between the mass and the measured capacitance,

$$m(C) = \frac{kx_0}{g} - \frac{k\epsilon A}{g}\frac{1}{C}.$$

Or, written in terms of the time constant $\tau = RC$,

$$m(\tau) = \tfrac{kx_0}{g} - \tfrac{k\epsilon AR}{g}\tfrac{1}{\tau}. \tag{1}$$

This has the form of a line, $y = mx + b$, with $x = 1/\tau$, intercept $b = \frac{kx_0}{g}$, and slope $m = \frac{k\epsilon AR}{g}$.

Sketch, qualitatively, what your graph of m vs. $1/\tau$ should look like.

4 Explore: Verifying the Mass–Capacitance Relationship

The lab app only collects data while it can talk to the data acquisition device, and its device status shows whether it can.

1. Connect the data acquisition device to the tablet with the USB cable. If a window pops up announcing a new device, just close it.
2. Open the lab app.
3. On the home page, confirm the device status reads **Connected**. If it reads **Not Connected**, check that both ends of the USB cable are pushed in firmly: the status changes to Connected on its own within a few seconds. Then open the **Lab 08** page and select the **RC Decay Capture** tab.

If the cable comes loose later, the status changes to **Not Connected** and **Measure** shows an error until you reconnect it. You don't need to restart the app.

When you click **Measure**, the app charges the capacitor to the set voltage, then discharges it through a 1 MΩ resistor while recording the voltage across the plates over time. Because the discharge is exponential, taking the natural log of the voltage gives a straight line whose slope is $-1/\tau$. The app fits that line and reports the time constant $\tau = RC$ in microseconds. The left plot shows the voltage decay over time, and the right plot shows the $\ln(V)$ fit used to determine τ.

Don't take your final data now, but try out your equipment in order to verify the functional dependence between m and $1/\tau$. When taking the data, consider the effect of the springs bouncing and how to reduce this effect.

Record your observations, including a new qualitative graph of m vs. $1/\tau$ if different than what you predicted before.

5 Discuss: Strategy for Measuring Unknown Parameters

Your goal is to characterize your capacitive sensor so that you can determine the mass of an unknown object. You will not, however, be measuring k, A, or R directly. Discuss with your partner a method by which you can determine $\frac{kx_0}{g}$ and $\frac{k\epsilon AR}{g}$ by repeated measurements of τ with different values of m.

You might find it useful to perform a linear fit on your data of m vs. $1/\tau$. The app's **Mass vs 1/τ Fitting** tab does this for you: enter your (τ, m) data and it reports the slope and intercept of the best-fit line, along with their uncertainties.

> Record your initial thoughts in your notebook.

6 Gather and Analyze Data: Calibration and Unknown Mass

You will measure τ for each sand container and use the results to calibrate your sensor. How you record and average your readings is up to you — for example, write them in your notebook and average with a calculator, or add a spreadsheet to your notebook (tap **Spreadsheet** in the tool bar) and average them there (which also lets you copy your data straight into the fitting tab). Either way, your measurements and averages must be recorded in your lab notebook.

Paste data takes cells copied from the spreadsheet in your notebook, two columns side by side: τ in microseconds on the left, and the mass in kilograms on the right. Select the two columns of numbers (not their headings): choose the first number, check that the bar above the spreadsheet shows its name, and drag to the last. Press **Ctrl+C**, then tap **Paste data** in the lab app, paste them into the box that opens (**Ctrl+V**), and click **OK** (Figure 2).

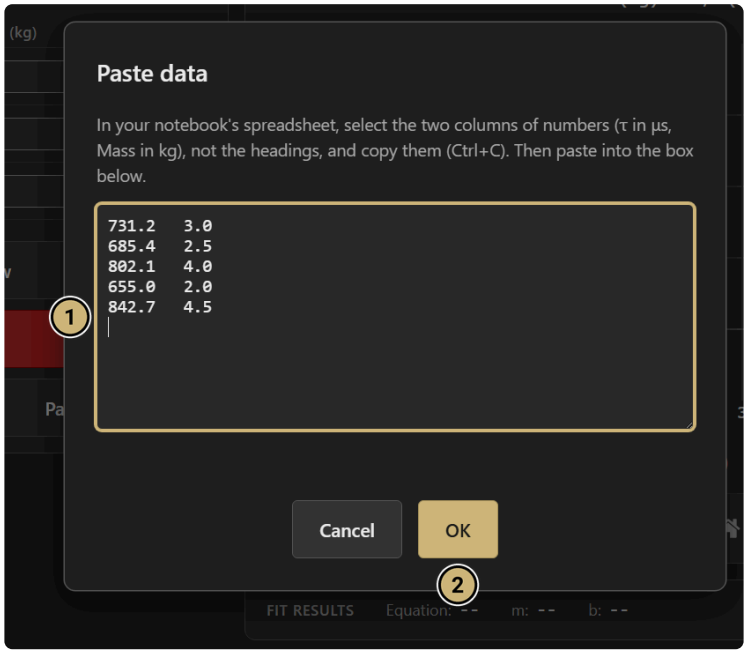

Figure 2: The lab app's Paste data window. 1: paste your two columns of numbers here. 2: OK.

Using the **RC Decay Capture** tab, measure τ for each of the sand containers, taking several measurements per mass and averaging them to reduce random uncertainty. Record your readings and per-mass averages in a table in your notebook. Then enter your averaged (τ, m) pairs into the **Mass vs $1/\tau$ Fitting** tab — by typing them in or using **Paste data** — and record the slope and intercept from Equation 1, with their uncertainties. The app rounds each value and its uncertainty to a matched precision; when you record them, apply the significant-figure convention from Lab 4.

Your fitted slope and intercept have now calibrated the sensor: a measured τ gives a mass through Equation 1. To test how well this works, you will determine an unknown mass two independent ways — using your calibrated sensor and using a trusted digital scale — and compare the results.

Ask your TA for an unknown mass and determine its mass two ways:

- **With your sensor:** measure τ for the unknown mass several times and average, then use Equation 1 with your fitted slope and intercept to calculate the mass.
- **With the digital scale:** weigh the unknown mass directly.

Comment on how your two determinations of the mass compare.

7 Predict: Applications of Capacitive Sensors

You have now built, tested, and used a capacitive sensor. Brainstorm with your partner at least three possible applications for such a device. Be creative!

Record your ideas in your lab notebook.

8 Draw Conclusions: Data Spread and Sensor Design

Answer the following questions in your lab notebook:

- How did the spread in your data affect your prediction?
- If you were developing a capacitive touch sensor, what parameters would you need to know to make sure your design would work?

9 Reflect

Briefly, record responses to the following:

- Describe something that worked well when doing the lab activity today.
- How did you contribute to this success?

When you are done, export your notebook and upload both files to Canvas: see Turn In Your Notebook. Then log out of the tablet computer and check it back in with your TA, along with its pen.